C.I.P.

8 x 51 R Lebel

Country of Origin: **FR**

TAB:	II
Date:	15-05-19
Revision:	-

Alternative Names: **8 mm Lebel (M/93)**

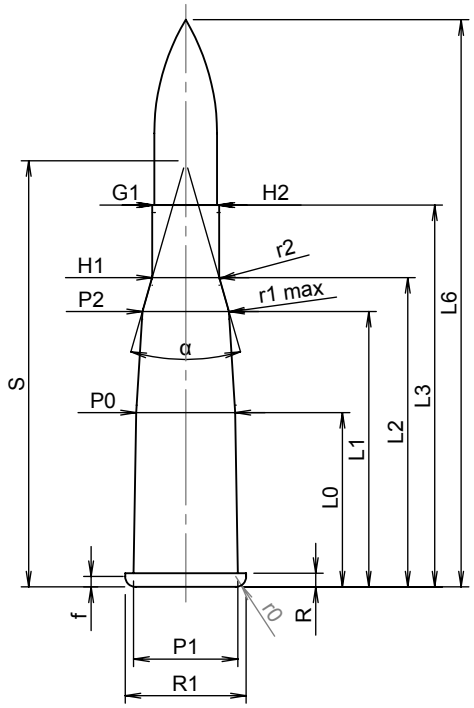

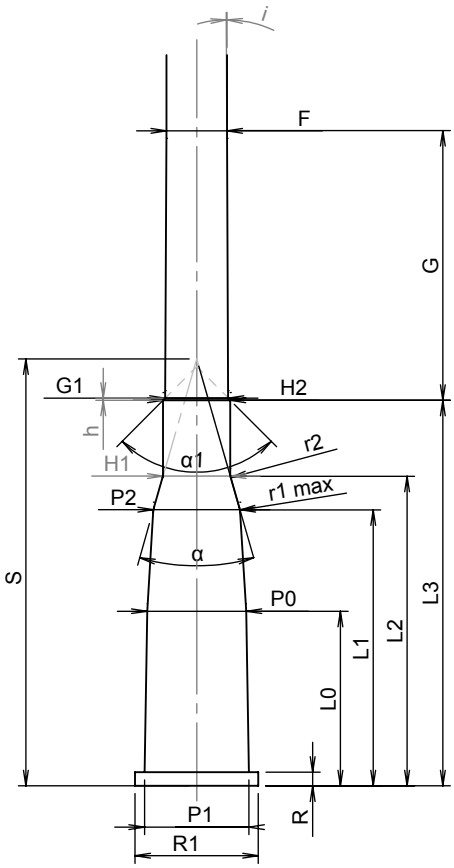

CARTRIDGE MAXI

Lenghts

L0 = **23.05**
L1 = **36.44**
L2 = **40.92**
L3 [1] = **50.50**
L4 = **-**
L5 = **-**
L6 = **75.00**

Case Head

R[1] = **1.80** **-0.25**
R1 = **16.00**
R3 = **-**
E = **-**
E1 = **-**
δ = **-**
f = **1.40**
β = **-**
r 0 = **1.40**

Powder Chamber

P0 = **13.06**
P1 = **13.77**
P2* = **11.42**

Junction Cone

α* = **32.00°**
S* = **56.35**
r1 min= **3.00**
r2 = **1.50**

Collar

H1* = **8.85**
H2[1] = **8.85**

Projectile

G1[1] = **8.30**
G2 = **-**
F = **-**
L3+G1[1]= **86.15**

Pressures(Energies)
Method Transducer

Pmax = **3200 bar**
PK = **3680 bar**
PE = **4000 bar**
M = **25.00**
EE = **3300 Joule**

Miscellaneous Dimensions

Fe[1) 4)] = **0.15**
delta L = **-**

CHAMBER MINI

Lenghts

L0 = **23.09**
L1 = **36.50**
L2 = **40.95**
L3 [1] = **51.00**

Breech

R[1] = **1.80**
R1 = **16.3**
R2 = **-**
R3 = **-**
r = **-**

Powder Chamber

E = **-**
P0 = **13.09**
P1[1] = **13.80**
P2* = **11.45**

Junction Cone

α[1]* = **32.00°**
S* = **56.47**
r1 max= **3.00**
r2 = **1.50**

Collar

H1* = **8.90**
H2[1] = **8.88**

Commencement of Rifling

G1[1]* = **8.35**
G[1] = **35.65**
α1 = **90.00°**
h* = **0.27**
s = **-**
i[1]* = **0°17'00"**
w = **-**

Barrel

F[1]* = **8.00**
Z[1] = **8.30**

Grooves

b = **3.45**
N = **4**
u = **240**
Q = **52.40 mm²**

Dimensions in <<mm>>
Dimensions and Tolerances for Proof Barrels
see Appendix CR1.

Notes: 1) Check for safety reason
4) Headspace on Rim
* Basic dimensions

Reproduction forbidden as well as in the form of extracts without appoval of C.I.P.